Falköping

MADE IN SWEDEN

HOT WATER DISCSPREADER

Friggeråkers Verkstäder – established 1937

This family company was founded in Falköping in 1937.
Initially the company manufactured simple types of transport fittings. The first sand spreader was manufactured in 1957.
Production began to concentrate on sand spreader manufacture and development of new products advanced surely and steadily. The first salt spreader was produced in 1983.
The factory has 6500 sq.m. of floor space with 40 employees. The factory produces approx. 500 sand and salt spreaders per annum. A service shop and service staff are on hand to supply "on the spot service".
Product development is continuous and market demand oriented.

Friggeråkers Verkstäder AB

HEAD OFFICE
Danska vägen 87
SE-521 32 Falköping
Tel +46 515 777 640

www.friggeraker.com

Reservation for changes in construction and material specifications.

CE Our machines are CE marked

Why make things complicated when

Falköping

makes things easy!

Our motto since 1937

LTFV

Falköping

HOT WATER DISCSPREADER

Falköping

– technically and consummately simple

- **Pure design without frills**
- **Few moving parts**
- **Simple outfeed design for maximum reliability**
- **Made in Sweden**

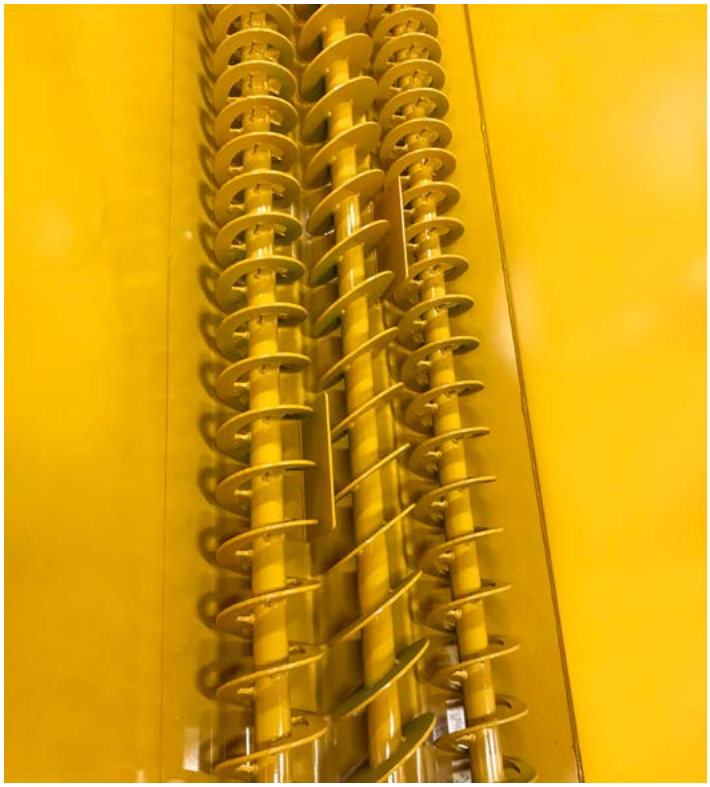

Feedscrew

- Double for reliable supply,
- Can be operated at the same time or separately
- Reversible, at a possible stop
- Patented bottom stirrer too extreme difficult material.

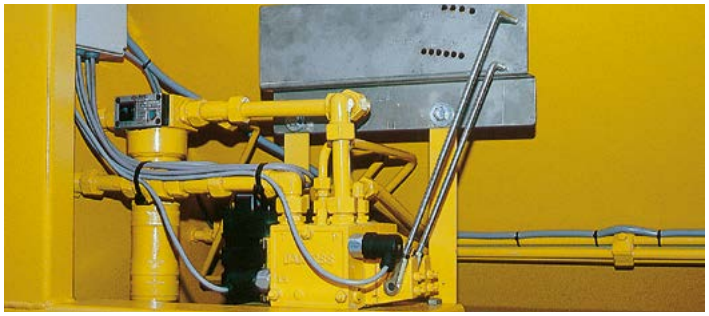

Compact hydraulics

- Manually operated to scale service-friendly modular system
- Excellent precision provided by position finding slider

Easy on and off loading

- Stable design
- Fast loading system

Easy loading

- Low loading height
- Steep sides to ensure complete emptying of container
- Low centre of gravity

Panel PC

- Stepless and synchronised breadth and quantity setting
- Road surface dependent, spreading synchronised with vehicle speed.
- Feed screw with feedback for maximum precision
- Spreading control with indication lamps
- Quantity meter
- Jettisoning
- Feed manoeuvring, right/left or both
- Warning light and lighting
- Simple calibration facilitated by built-in tachometer function
- Prepared for computerized data collection, GPS and GSM activation and control by road surface temperature
- Prepared for external communication CEN/DAU-protocol

Panel PC

GPS-controlled spreading

Our new developed programme which can be used in easy-to-place Panel PC. The programme can handle routes and spreading schedules which are programmed in advance. The programme handles automaticcally, quantity, width, symmetry etc.

- The driver can be concentrated on the traffic
- Correct width and symmetry gives a reduction of the spreding quantity.
- During the route the driver gets instructions both visually and by voice.

A concept that provides long lasting anti-skid treatment and

- higher efficiency

- better road safety

- high friction

- good environmental care

- improved total economy

LTFV speads:

- **SAND**
- **SALT SLURRY**
- **SALT**
- **PRE WETTED SALT**
- **HOT WATER PRE WETTED SAND**
- **HOT WATER PRE WETTED SALT**

Special for airports

For even more effiency the LTFV-spreader can be equiped with duoble spreading discs.

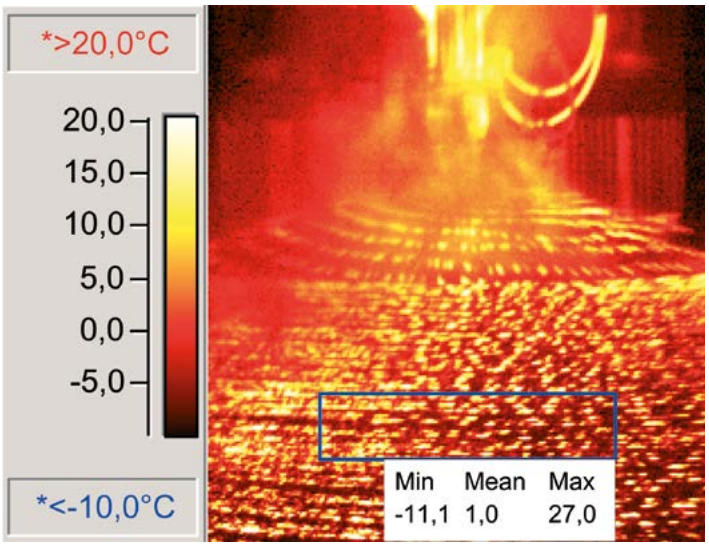

Photograph taken with a thermostatic camera at moment of spreading.

Effective icy surface treatment with hot water and sand spreading.

For optimum length of effect, the newly developed hot water and sand spreader, Falköping LTFV is the most efficient method in use. Sand mixed with 95°C hot water creates an anti-skid surface that freezes onto the road.
The ice-bound sand provides excellent friction over a long period of time.
The spreader is fitted with exhaust emission heating to provide pre-heated spreading material. For even and accurate measurement of spreading material, the spreader has a built-in agitator. The spreader can be used as a salt spreader for dry, pre wetted or mixed material.

LTFV

Long Time Friction hot water

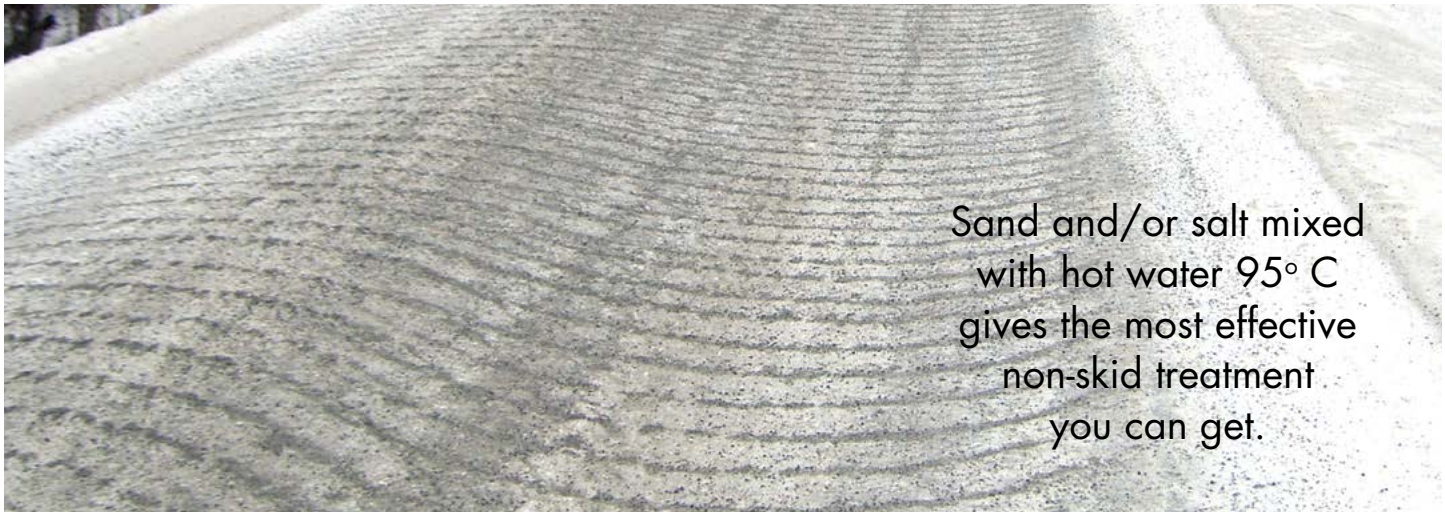

MODEL		C-7 LTFV	C-9LTFV	C-9 LTFV-2T
Volume. m³	Sand/salt	7.0	9.0	9.0
	liquid	2.1	2.7	2.7
Weight, kg		3.200	3.300	3.500
Heating power, kW		300	300	300
Disc spreader, Qty		1	1	2
Water temperature, °C		95	95	95
Heating time, minutes		9	9	9

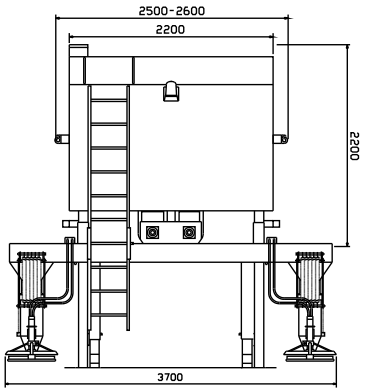

Compact: LTFV also delivered in a compact model for shorter flat lengths.
Surface fininsh: Zinc metallized, primer and 2-component top coat.
Accessories: Remote controlled spreading system, mixer, hydraulic disc hoist, side jumpers, motorpowered etc

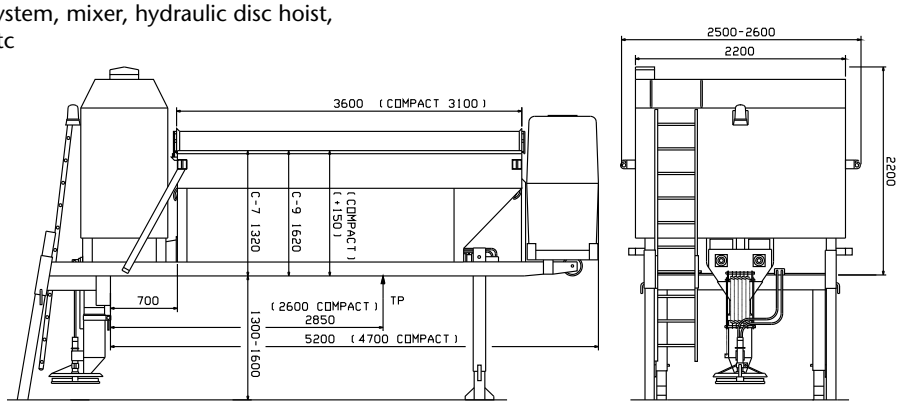

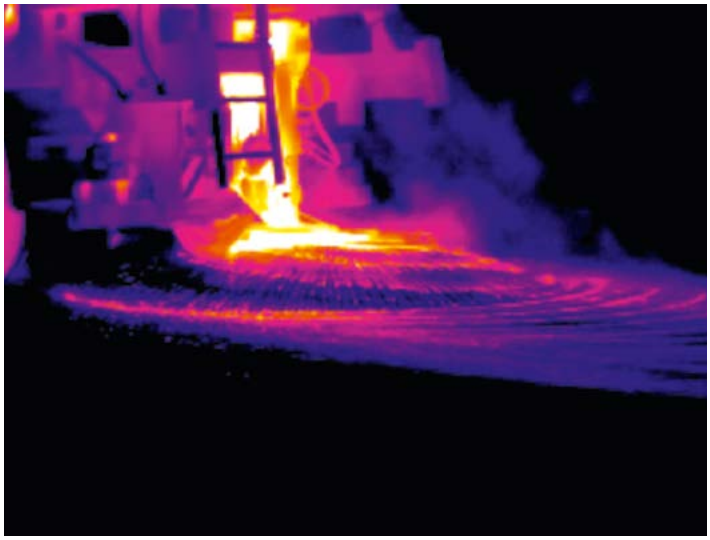

TEKNICAL SPECIFICATION | HES

MODELL		C-7 HES	C-9 HES
Volume. m³	Sand/salt	7.0	9.0
	liquid	2.1	2.7
Weight, kg		2.200	2.300
Heating power, kW		80	80
Disc spreader, Qty.		1	1
Water temperature, °C		95	95
Heating time, minutes		9	9

Compact: HES also available for shorter flat lengths.
Surface finish: Zinc metallized, primer and 2-component top coat.
Accessories: Remote controlled spreading configuration, mixer, hydraulic dischoist, side jumpers, motor powered etc.

Hot water salt spreading

Heating of the pre wetting water gives an optimal result.

- Reduced salt comsumption
- Faster and increased anti-slip effect
- Increased temperature range

Further informtion of the method
www.vegvesen.no
Startpage Fagstof / Report 2370

HES
High Energy Salting

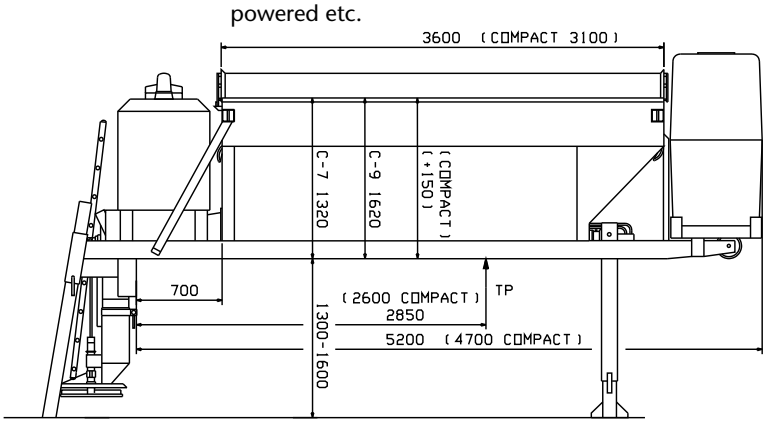

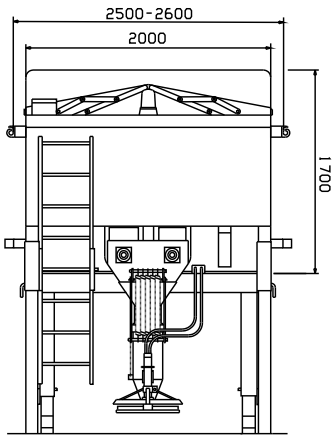

EXAMPLE: SALT LIQUID

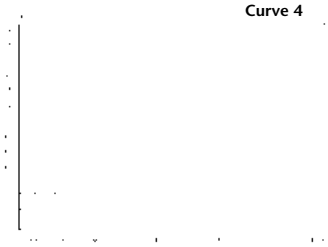

IR-AUTOMATIC

Automatic dosage of salt according to road surface temperature. 4 dose curves for different road conditions. The display shows the road and air temperature.

GPS

(Globalt Positionerings System)

DATA COLLECTION

For control and read-off of running history of all actual values controlled from the instrument panel. The system can be complemented with GPS for automatic route determination. The con-troller can communicate via GSM telephone. The temperature of the road surface can be used for automatic salt dosage control.

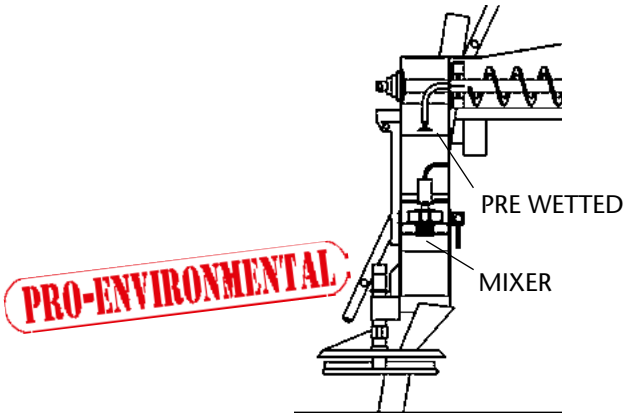

MIXER

For making salt slurry. Effective disintegration of pre wetted salt for optimum slippery surface prevention with salt mixture.

LOAD CARRIER FRAME

Simple fitting without having to disturb spreader.

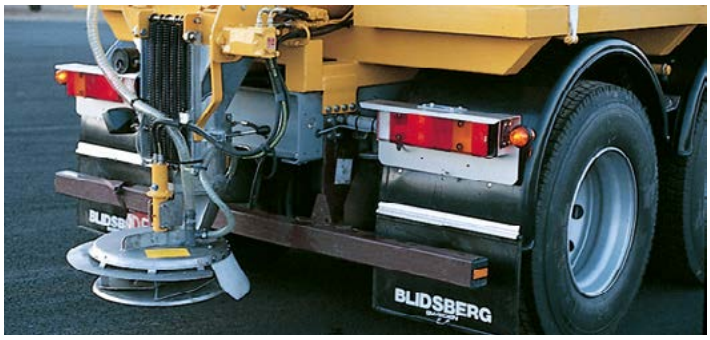

DISC HOIST

Controlled from instrument panel.
Prevents damage to disc.

HYDRAULIC OPERATION

The spreader is hydraulically powered as standard, with optional motor power. The spreader can always be driven hydraulically, even when motor power is fitted.

RAILING

Maneuvered with help of the ladder.

WINLÖF & CO. 2026

Friggeråkers Verkstäder AB

HEAD OFFICE
Danska vägen 87
SE-521 32 Falköping
Tel +46 515 777 640

www.friggeraker.com